L F SCHMIDT
LICENSE
No. 43409
STATE OF FLORIDA
PROFESSIONAL ENGINEER

Digitally signed by Lyndon F Schmidt
Date: 2026.07.16 09:18:25 -04'00'

This item has been digitally signed and sealed by **L. F. Schmidt, P.E.** on the date adjacent to the seal.

Printed copies of this document are not considered signed and sealed and the signature must be verified on any electronic copies.

THIS PRODUCT APPROVAL IS VALID ONLY FOR THE STATE OF FLORIDA

ODL, Inc.

Evolve Lite Frame System

DOORGLASS ASSEMBLY

FOR GLAZING UP TO A 3'0 x 8'0" SINGLE PANEL

"NON-IMPACT"

GENERAL NOTES

1. This product has been evaluated and is in compliance with the 9th Edition (2026) Florida Building Code (FBC) structural requirements including the High Velocity Hurricane Zone (HVHZ).
2. When used in the "HVHZ" this product is required to be protected with an impact resistant covering that complies with Section 1626 of the FBC.
3. This product is approved for use as a substitute doorglass assembly in conjunction with a glazed steel or fiberglass side hinged swing door and/or fixed sidelite possessing a comparable current Florida Statewide product approval.
4. The design pressure (DP) rating shall be the lesser of the DP rating shown on Sheet 1 of this approval or the DP rating shown in the glazed steel or fiberglass side hinged swing door or fixed sidelite approval being used.
5. The door panel and lite opening size shall not exceed the sizes shown in this approval or the glazed steel or fiberglass side hinged swing door or fixed sidelite approval being used.
6. This product has been tested in the door and/or sidelite panels as specified on Sheets 3 & 4 of this approval. Substitution into a similar product may be approved for use by the local Authority Having Jurisdiction. In all cases, the glazed steel or fiberglass door and/or sidelite used must possess a comparable current Florida Statewide product approval.

TABLE OF CONTENTS

SHEET #	DESCRIPTION
1	Typical elevations, design pressures and general notes
2	Frame & glazing details & bill of materials
3	Fiberglass door panels
4	Steel door panels

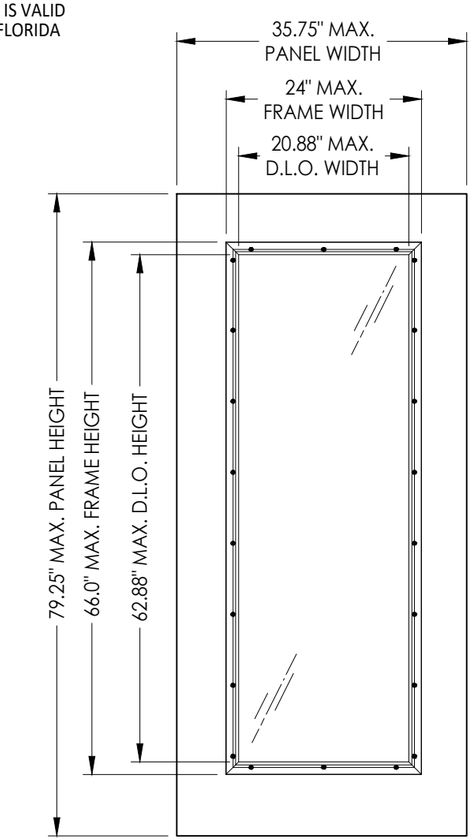

6'-8" DOOR/SIDELITE PANEL

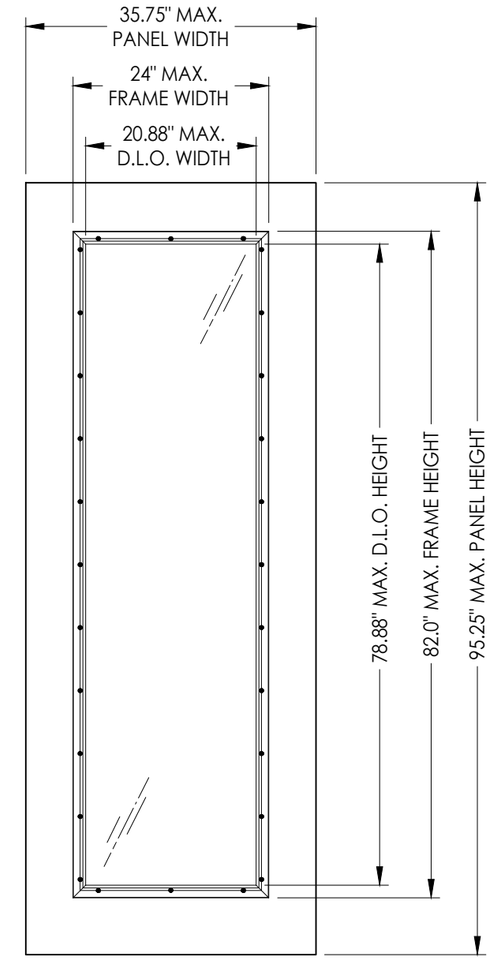

8'-0" DOOR/SIDELITE PANEL

MAX DESIGN PRESSURE RATINGS (PSF)*		
DOOR TYPE	POSITIVE	NEGATIVE
6'-8" STEEL	+60.0	-60.0
6'-8" FIBERGLASS	+65.0	-65.0
8'-0" STEEL	+60.0	-60.0
8'-0" FIBERGLASS	+65.0	-65.0

*SEE SHEETS 3 & 4 FOR DOOR PANEL DESIGN PRESSURE RATING LIMITATIONS

Documents Prepared By:
Lyndon F. Schmidt
P.E. No. 43409
RW BUILDING CONSULTANTS, INC.
P.O. Box 230, Valrico, FL 33595
Phone No.: 813.659.9197
FBPE Registry No. 9813

PRODUCT: *EVOLVE LITE FRAME SYSTEM*

PART OR ASSEMBLY: *TYPICAL ELEVATIONS, DESIGN PRESSURES & GENERAL NOTES*

NO.	DATE	BY
6	7/01/26	UPDATE TO 9TH ED. (2026) FBC	LFS
5	7/01/23	UPDATE TO 8TH ED. (2023) FBC	LFS
4	8/05/20	UPDATE TO 7TH ED. (2020) FBC	DAC
3	4/04/19	UPDATE D.P. FOR NEW TESTING	LFS

REVISIONS

DATE: 3/31/15
SCALE: N.T.S.
DWG. BY: JK
CHK. BY: LFS
DRAWING NO.: FL-15260.15
SHEET 1 OF 4

© 2015 R.W. BUILDING CONSULTANTS INC.

G:\ODL\FL-15260 R12\FL-15260.15.dwg

BILL OF MATERIALS		
ITEM #	DESCRIPTION	MATERIAL
1	INTERIOR FRAME (EVOLVE)	HP-POLYPRO
2	EXTERIOR FRAME (EVOLVE)	HP-POLYPRO
3	#8 X 1-1/2" PPH SMS (HI-LO THREAD)	STEEL

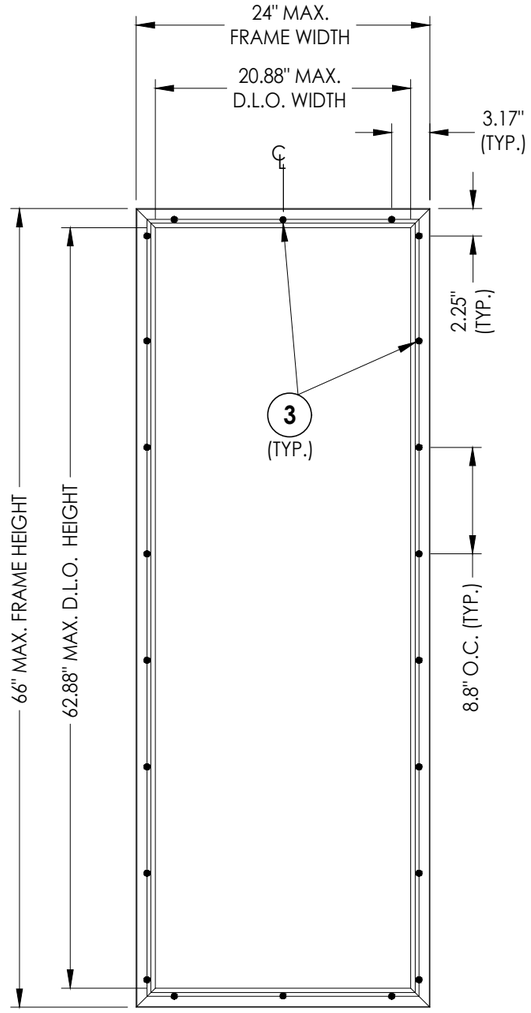

EVOLVE FRAME SYSTEM
HP Polypropylene
6'-8" DOOR

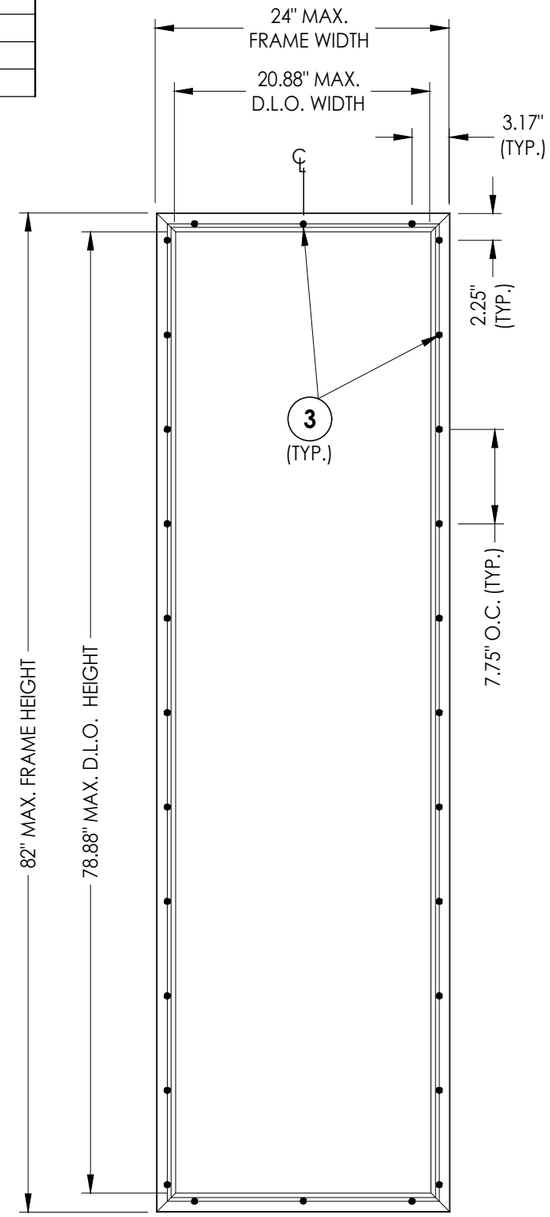

EVOLVE FRAME SYSTEM
HP Polypropylene
8'-0" DOOR

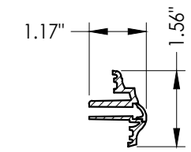

1 **INTERIOR FRAME**
Evolve Frame

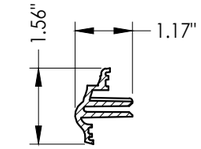

2 **EXTERIOR FRAME**
Evolve Frame

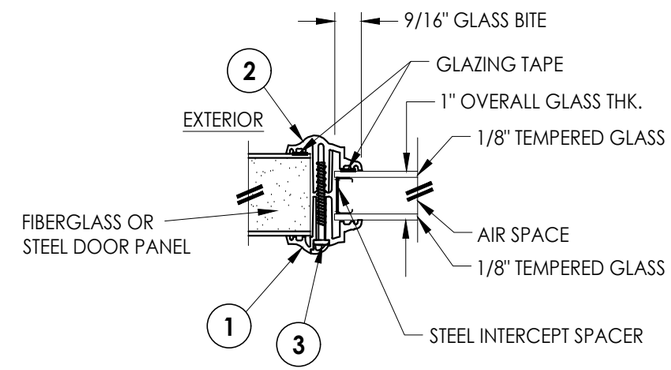

G1 **GLAZING DETAIL**
EVOLVE FRAME (1" INSULATED GLASS)
TAPE GLAZING

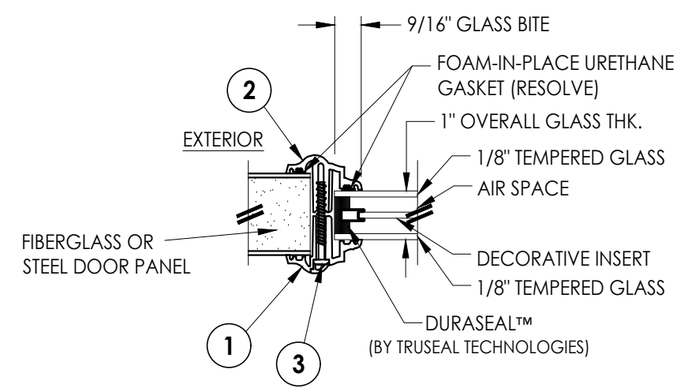

G2 **GLAZING DETAIL**
EVOLVE FRAME (1" DECOSEAL INSULATED GLASS)
RESOLVE GASKET

Documents Prepared By:
Lyndon F. Schmidt
P.E. No. 43409
RW BUILDING CONSULTANTS, INC.
P.O. Box 230, Valrico, FL 33595
Phone No.: 813.659.9197
FBPE Registry No. 9813

PRODUCT: EVOLVE LITE FRAME SYSTEM

PART OR ASSEMBLY: FRAME & GLAZING DETAILS & BILL OF MATERIALS

NO.	DATE	REVISIONS	BY
6	7/01/26	UPDATE TO 9TH ED. (2026) FBC	LFS
5	7/01/23	UPDATE TO 8TH ED. (2023) FBC	LFS
4	8/05/20	UPDATE TO 7TH ED. (2020) FBC	DAC
3	4/04/19	UPDATE D.P. FOR NEW TESTING	LFS

DATE: 3/31/15
SCALE: N.T.S.
DWG. BY: JK
CHK. BY: LFS
DRAWING NO.: FL-15260.15
SHEET 2 OF 4

© 2015 R.W. BUILDING CONSULTANTS INC.

G:\ODL\FL-15260 R12\FL-15260.15.dwg

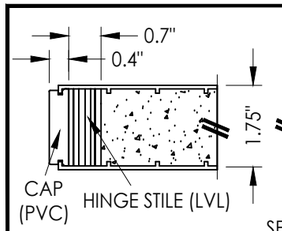

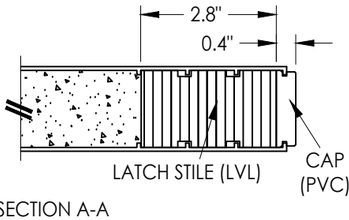

SECTION A-A

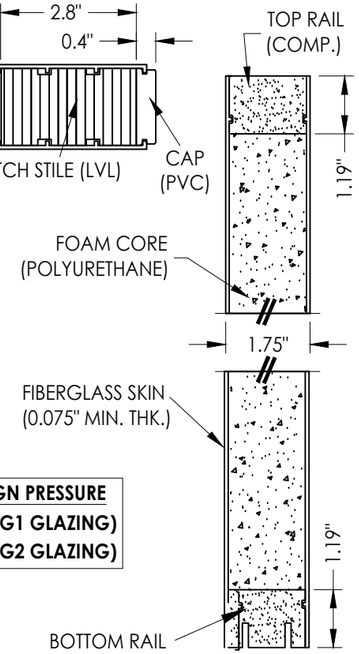

SECTION B-B

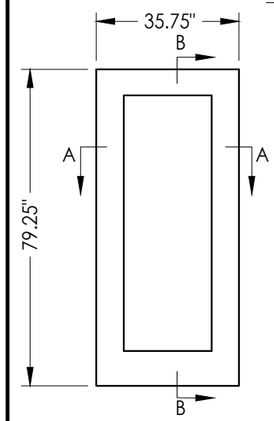

MAX. DESIGN PRESSURE
+65/-65 PSF (G1 GLAZING)
+65/-65 PSF (G2 GLAZING)

FIBERGLASS DOOR PANEL
Plastpro 6' 8"

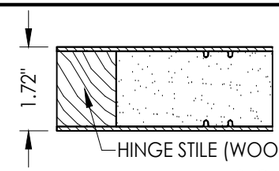

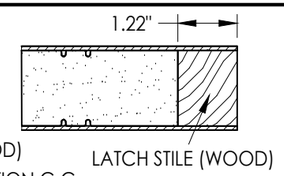

SECTION C-C

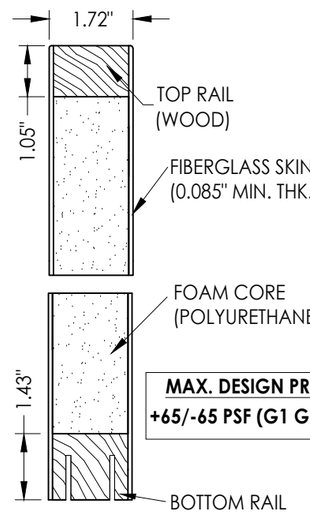

MAX. DESIGN PRESSURE
+65/-65 PSF (G1 GLAZING)

SECTION D-D

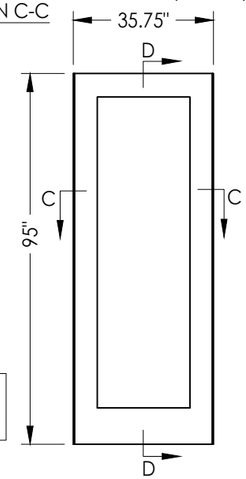

FIBERGLASS DOOR PANEL
Mastergrain 8'

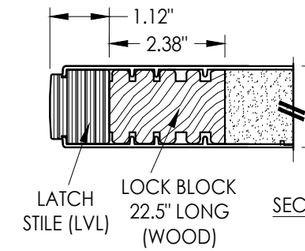

SECTION E-E

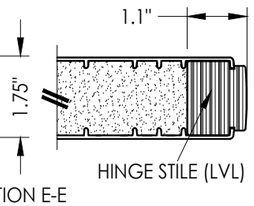

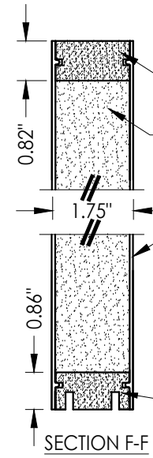

MAX. DESIGN PRESSURE
+65/-65 PSF (G1 GLAZING)
+60/-60 PSF (G2 GLAZING)

SECTION F-F

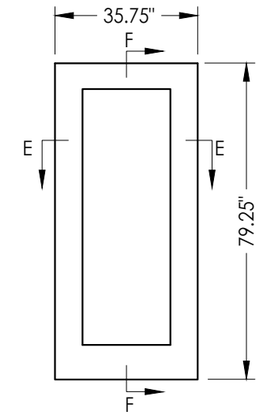

FIBERGLASS DOOR PANEL
Therma-Tru 6' 8"

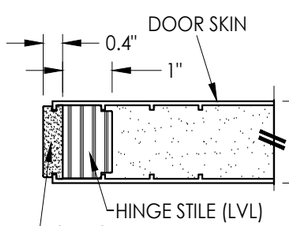

SECTION G-G

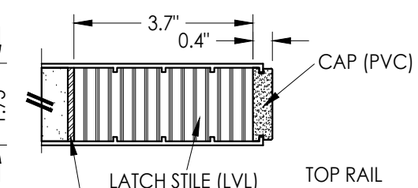

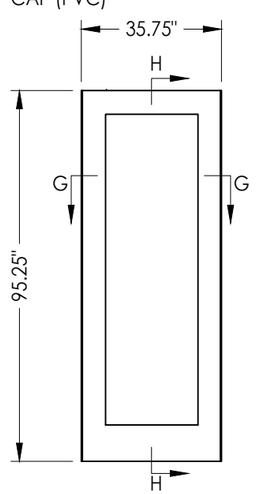

MAX. DESIGN PRESSURE
+65/-65 PSF (G1 GLAZING)
+65/-65 PSF (G2 GLAZING)

FIBERGLASS DOOR PANEL
Plastpro 8'

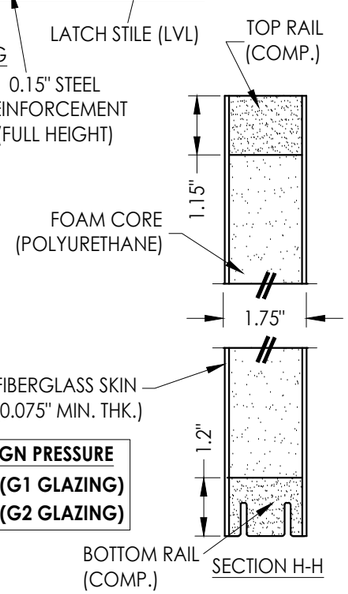

SECTION H-H

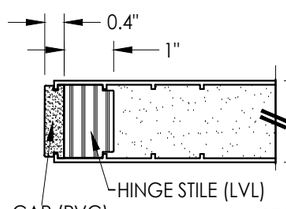

SECTION J-J

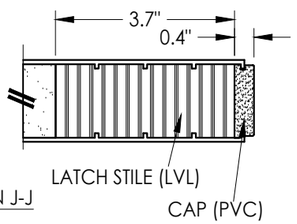

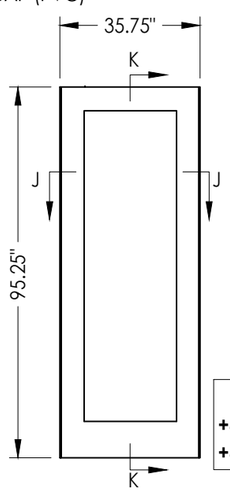

FIBERGLASS DOOR PANEL
Plastpro 8'

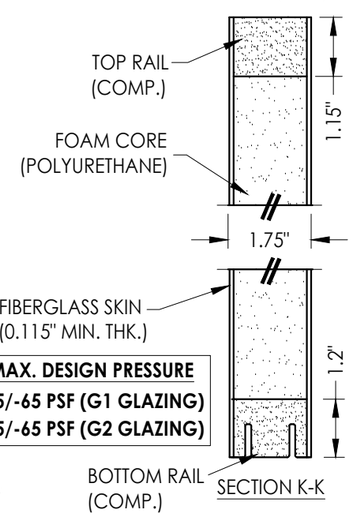

MAX. DESIGN PRESSURE
+65/-65 PSF (G1 GLAZING)
+65/-65 PSF (G2 GLAZING)

SECTION K-K

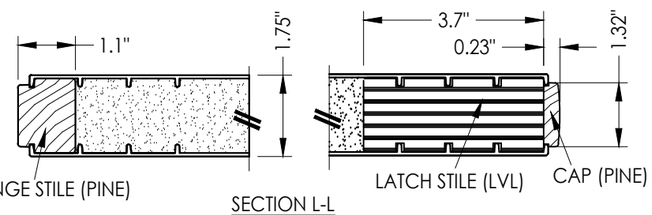

SECTION L-L

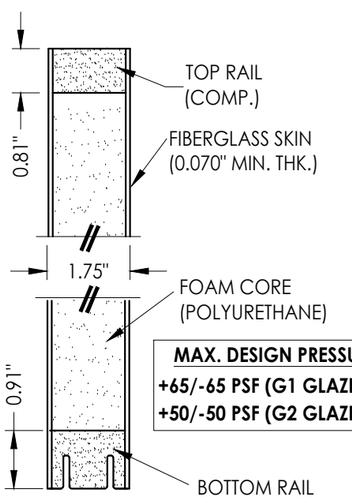

MAX. DESIGN PRESSURE
+65/-65 PSF (G1 GLAZING)
+50/-50 PSF (G2 GLAZING)

SECTION M-M

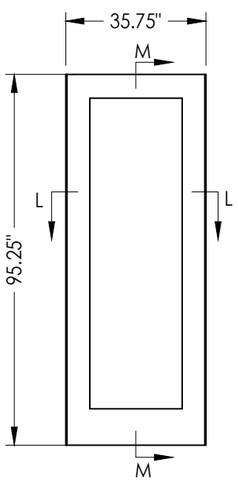

FIBERGLASS DOOR PANEL
Therma-Tru 8'

Documents Prepared By:
Lyndon F. Schmidt
P.E. No. 43409

RW BUILDING CONSULTANTS, INC.
P.O. Box 230, Valrico, FL 33595
Phone No.: 813.659.9197
FBPE Registry No. 9813

PRODUCT: *EVOLVE LITE FRAME SYSTEM*

PART OR ASSEMBLY: *FIBERGLASS DOOR PANELS*

REVISIONS

NO.	DATE	BY
6	7/01/26	LFS
5	7/01/23	LFS
4	8/05/20	DAC
3	4/04/19	LFS

UPDATE TO 9TH ED. (2026) FBC
UPDATE TO 8TH ED. (2023) FBC
UPDATE TO 7TH ED. (2020) FBC
UPDATE D.P. FOR NEW TESTING

DATE: 3/31/15
SCALE: N.T.S.
DWG. BY: JK
CHK. BY: LFS
DRAWING NO.: FL-15260.15
SHEET 3 OF 4

© 2015 R.W. Building Consultants Inc.

G:\ODL\FL-15260 R12\FL-15260.15.dwg

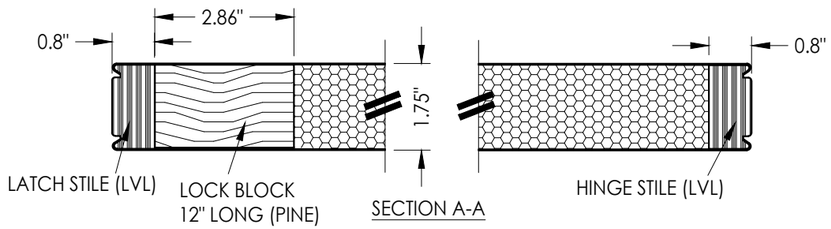

SECTION A-A

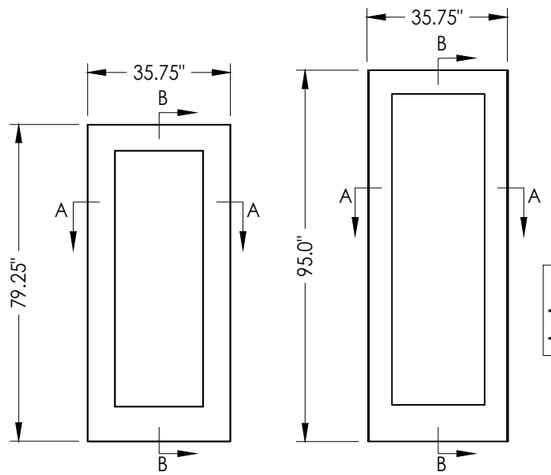

STEEL DOOR PANEL
Masonite 6' 8"

STEEL DOOR PANEL
Masonite 8'

MAX. DESIGN PRESSURE
+60/-60 PSF (G1 GLAZING)
+60/-60 PSF (G2 GLAZING)

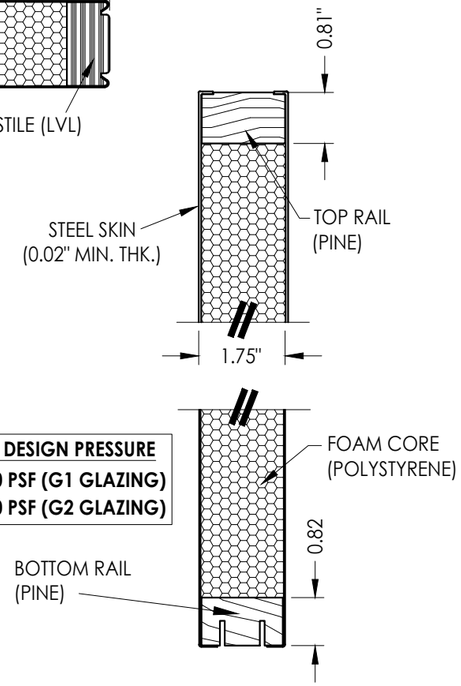

SECTION B-B

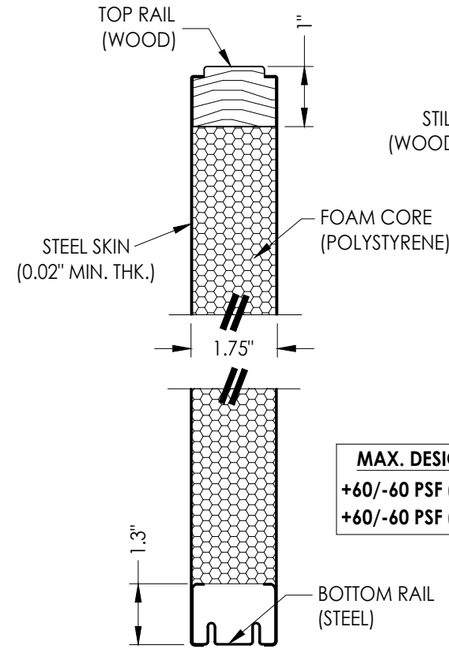

SECTION D-D

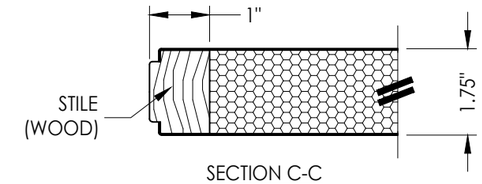

SECTION C-C

MAX. DESIGN PRESSURE
+60/-60 PSF (G1 GLAZING)
+60/-60 PSF (G2 GLAZING)

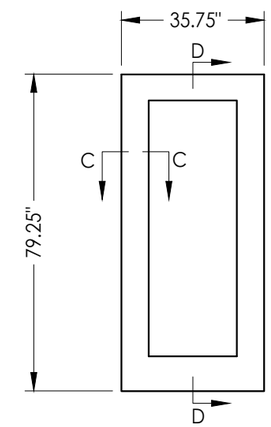

STEEL DOOR PANEL
JELD-WEN 6' 8"

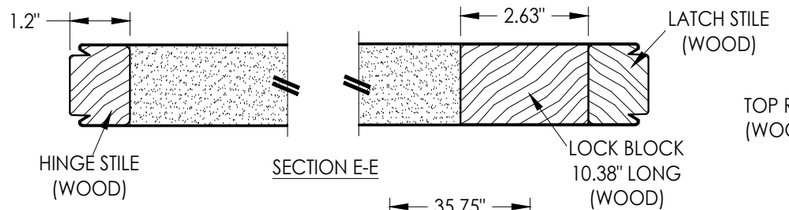

SECTION E-E

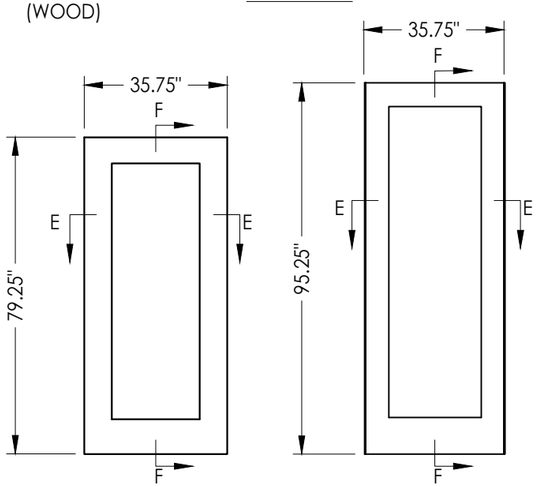

STEEL DOOR PANEL
Therma-Tru 6' 8"

STEEL DOOR PANEL
Therma-Tru 8'

MAX. DESIGN PRESSURE
+60/-60 PSF (G1 GLAZING)
+60/-60 PSF (G2 GLAZING)

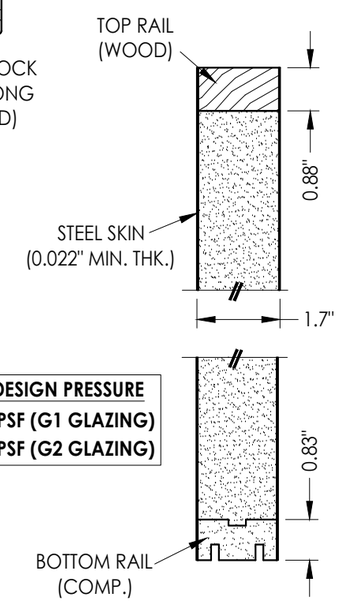

SECTION F-F

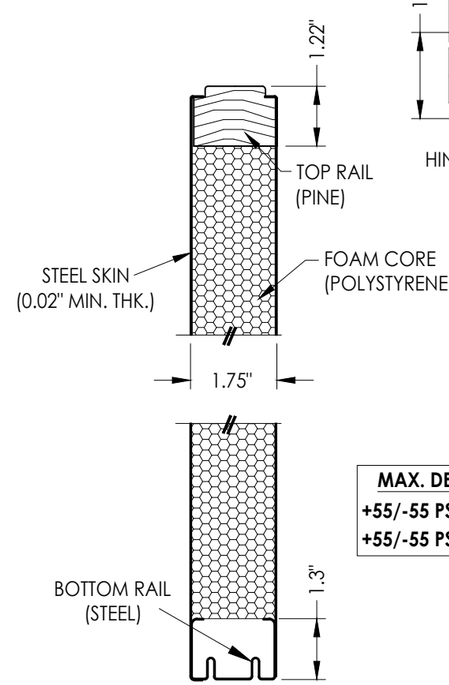

SECTION H-H

MAX. DESIGN PRESSURE
+55/-55 PSF (G1 GLAZING)
+55/-55 PSF (G2 GLAZING)

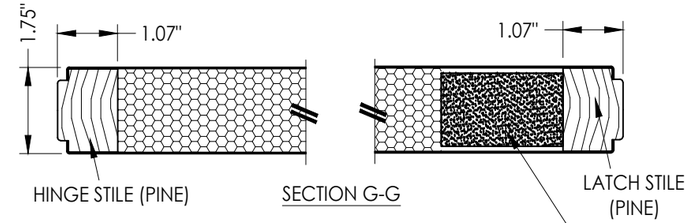

SECTION G-G

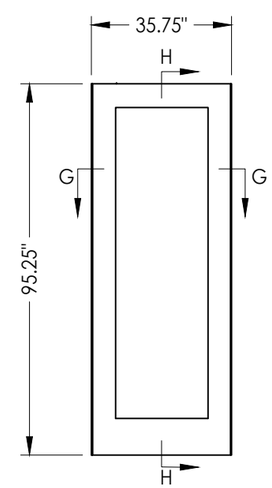

STEEL DOOR PANEL
JELD-WEN 8'

Documents Prepared By:
Lyndon F. Schmidt
P.E. No. 43409

RW BUILDING CONSULTANTS, INC.
P.O. Box 230, Valrico, FL 33595
Phone No.: 813.659.9197
FBPE Registry No. 9813

PRODUCT: EVOLVE LITE FRAME SYSTEM

PART OR ASSEMBLY: STEEL DOOR PANELS

NO.	DATE	REVISIONS	BY
6	7/01/26	UPDATE TO 9TH ED. (2026) FBC	LFS
5	7/01/23	UPDATE TO 8TH ED. (2023) FBC	LFS
4	8/05/20	UPDATE TO 7TH ED. (2020) FBC	DAC
3	4/04/19	UPDATE D.P. FOR NEW TESTING	LFS

DATE: 3/31/15
SCALE: N.T.S.
DWG. BY: JK
CHK. BY: LFS
DRAWING NO.: FL-15260.15
SHEET 4 OF 4

© 2015 R.W. BUILDING CONSULTANTS INC.

G:\ODL\FL-15260 R12\FL-15260.15.dwg